DATASHEET

8 PIN DIP WIDE BODY HIGH SPEED 10MBit/s LOGIC GATE PHOTOCOUPLER ELW137 ELW26XX Series

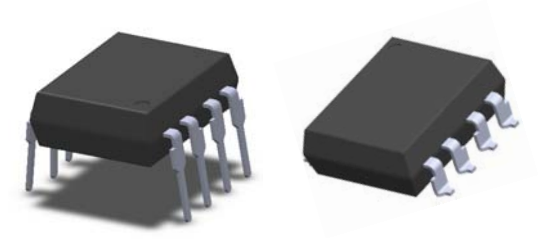

Schematic

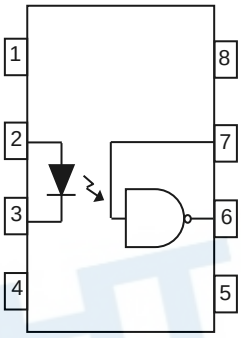

A 0.1μF bypass capacitor must be connected between pins 8 and 5 *3

Features

- High speed 10Mbit/s
- Guaranteed performance from -40 to 85℃
- Logic gate output
- High isolation voltage between input and output (Viso =5000 V rms)
- Compliance with EU REACH
- The product itself will remain within RoHS compliant version
- UL and cUL approved(No. E214129)
- VDE approved (No. 40028391)
- SEMKO approved
- NEMKO approved
- DEMKO approved
- FIMKO approved

Pin Configuration
1, No Connection
2, Anode
3, Cathode
4. No Connection
5, Gnd
6, Vout
7, V_E
8, V_{CC}

Description

The ELW137, ELW2601 and ELW2611 consists of an infrared emitting diode optically coupled to a high speed integrated photo detector logic gate with a strobable output.
It is packaged in a 8-pin wide body package and available SMD options.

Applications

- Ground loop elimination
- LSTTL to TTL, LSTTL or 5 volt CMOS
- Line receiver, data transmission
- Data multiplexing
- Switching power supplies
- Pulse transformer replacement
- Computer peripheral interface
- High speed logic ground isolation

Truth Table (Positive Logic)

Input	Enable	Output
H	H	L
L	H	H
H	L	H
L	L	H
H	NC	L
L	NC	H

Copyright © 2010, Everlight All Rights Reserved. Release Date : Jan 11, 2017. Issue No: DPC-0000115 Rev.10

Ver:10 Release Date:05/15/2018 状态:Approved(正式版行)

Absolute Maximum Ratings (T_A=25℃)

Parameter		Symbol	Rating	Unit
Input	Forward current	I_F	50	mA
	Enable input voltage Not exceed V_{CC} by more than 500mV	V_E	5.5	V
	Reverse voltage	V_R	5	V
	Power dissipation	P_D	100	mW
Output	Power dissipation	P_C	85	mW
	Output current	I_O	50	mA
	Output voltage	V_O	7.0	V
	Supply voltage	V_{CC}	7.0	V
Isolation voltage *1		V_{ISO}	5000	V rms
Operating temperature		T_{OPR}	-40 ~ +85	°C
Storage temperature		T_{STG}	-55 ~ +125	°C
Soldering temperature *2		T_{SOL}	260	°C

Notes:
*1 AC for 1 minute, R.H.= 40 ~ 60% R.H. In this test, pins 1, 2, 3 & 4 are shorted together, and pins 5, 6, 7 & 8 are shorted together.

*2 For 10 seconds.

Copyright © 2010, Everlight All Rights Reserved. Release Date : Jan 11, 2017. Issue No: DPC-0000115 Rev.10

Ver:1.0 Release Date:05/15/2018 此版本Approved正式(發行)

Electrical Characteristics (T_A=-40 to 85°C unless specified otherwise)

Input

Parameter	Symbol	Min.	Typ.	Max.	Unit	Condition
Forward voltage	V_F	-	1.4	1.8	V	I_F = 10mA
Reverse voltage	V_R	5.0	-	-	V	I_R = 100μA, T_A=25℃
Temperature coefficient of forward voltage	$\Delta V_F/\Delta T_A$	-	-1.9	-	mV/°C	I_F =10mA
Input capacitance	C_{IN}	-	70	-	pF	V_F=0, f=1MHz

Output

Parameter	Symbol	Min.	Typ.	Max.	Unit	Condition
High level supply current	I_{CCH}	-	6.5	10	mA	I_F=0mA, V_E=0.5V, V_{CC}=5.5V
Low level supply current	I_{CCL}	-	8	13	mA	I_F=10mA, V_E=0.5V, V_{CC}=5.5V
High level enable current	I_{EH}	-	- 0.6	-1.6	mA	V_E=2.0V, V_{CC}=5.5V
Low level enable current	I_{EL}	-	- 0.8	-1.6	mA	V_E=0.5V, V_{CC}=5.5V
High level enable voltage	V_{EH}	2.0	-	-	V	I_F=10mA, V_{CC}=5.5V
Low level enable voltage*4	V_{EL}	-	-	0.8	V	I_F=10mA, V_{CC}=5.5V

Transfer Characteristics (T_A=-40 to 85°C unless specified otherwise)

Parameter	Symbol	Min	Typ.	Max.	Unit	Condition
High level output current	I_{OH}	-	2.1	100	uA	V_{CC}=5.5V, V_O=5.5V, I_F=250uA, V_E=2.0V
Low level output voltage	V_{OL}	-	0.35	0.6	V	V_{CC} = 5.5V, I_F=5mA, V_E=2.0V, I_{OL}(Sinking)=13mA
Input threshold current	I_{FT}	-	3.0	5	mA	V_{CC}= 5.5V, V_O=0.6V, V_E=2.0V, I_{OL}(Sinking)=13mA

Copyright © 2010, Everlight All Rights Reserved. Release Date : Jan 11, 2017. Issue No: DPC-0000115 Rev.10
Ver:1.0 Release Date:06/15/2016 标准版:Approved正式(量产)

Switching Characteristics (T_A=-40 to 85℃, V_{CC}=5V, I_F=7.5mA unless specified otherwise)

Parameter	Symbol	Min	Typ.	Max.	Unit	Condition
Propagation delay time to output High level*5 (Fig.12)	T_{PHL}	-	35	100	ns	C_L = 15pF, R_L=350Ω, T_A=25℃
Propagation delay time to output Low level*6 (Fig.12)	T_{PLH}	-	40	100	ns	C_L = 15pF, R_L=350Ω, T_A=25℃
Pulse width distortion	$\lvert T_{PHL} - T_{PLH} \rvert$	-	5	40	ns	C_L = 15pF, R_L=350Ω
Output rise time*7 (Fig.12)	tr	-	40	-	ns	C_L = 15pF, R_L=350Ω
Output fall time*8 (Fig.12)	tf	-	10	-	ns	C_L = 15pF, R_L=350Ω

Switching Characteristics (T_A=-40 to 85℃, V_{CC}=5V, I_F=7.5mA unless specified otherwise)

Parameter		Symbol	Min	Typ.	Max.	Unit	Condition
Enable Propagation Delay Time to Output High Level*9 (Fig.13)		t_{ELH}	-	15	-	ns	I_F = 7.5mA , V_{EH}=3.5V, C_L = 15pF, R_L=350Ω
Enable Propagation Delay Time to Output Low Level*10 (Fig.13)		t_{EHL}	-	15	-	ns	I_F = 7.5mA , V_{EH}=3.5V, C_L = 15pF, R_L=350Ω
Common Mode Transient Immunity at Logic High *11	ELW137	CM_H	-	-	-	V/μS	I_F = 7.5mA , V_{OH}=2.0V, R_L=350Ω, T_A=25℃ V_{CM}=10Vp-p (Fig.14)
	ELW2601		5,000	-	-		I_F = 7.5mA , V_{OH}=2.0V, R_L=350Ω, T_A=25℃ V_{CM}=50Vp-p (Fig.14)
	ELW2611		10,000	-	-		I_F = 7.5mA , V_{OH}=2.0V, R_L=350Ω, T_A=25℃ V_{CM}=400Vp-p (Fig.14)
	ELW2611		20,000	-	-		I_F = 7.5mA , V_{OH}=2.0V, R_L=350Ω, T_A=25℃ V_{CM}=400Vp-p (Fig.15)
Common Mode Transient Immunity at Logic Low *12	ELW137	CM_L	-	-	-	V/μS	I_F = 0mA , V_{OL}=0.8V, R_L=350Ω, T_A=25℃ V_{CM}=10Vp-p (Fig.14)
	ELW2601		5,000	-	-		I_F = 0mA , V_{OL}=0.8V, R_L=350Ω, T_A=25℃ V_{CM}=50Vp-p (Fig.14)
	ELW2611		10,000	-	-		I_F = 0mA , V_{OL}=0.8V, R_L=350Ω, T_A=25℃ V_{CM}=400Vp-p (Fig.14)
	ELW2611		20,000	-	-		I_F = 7.5mA , V_{OH}=2.0V, R_L=350Ω, T_A=25℃ V_{CM}=400Vp-p (Fig.15)

Copyright © 2010, Everlight All Rights Reserved. Release Date : Jan 11, 2017. Issue No: DPC-0000115 Rev.10
Ver:1.10 Release Date:06/15/2016 此版本为approved正式版本

Typical Electro-Optical Characteristics Curves

Figure 1. Forward Current vs Forward Voltage

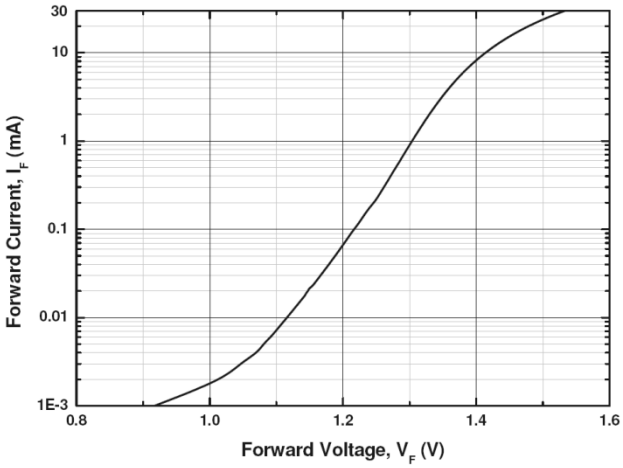

Figure 2. Low Level Output Voltage vs Ambient Temperature

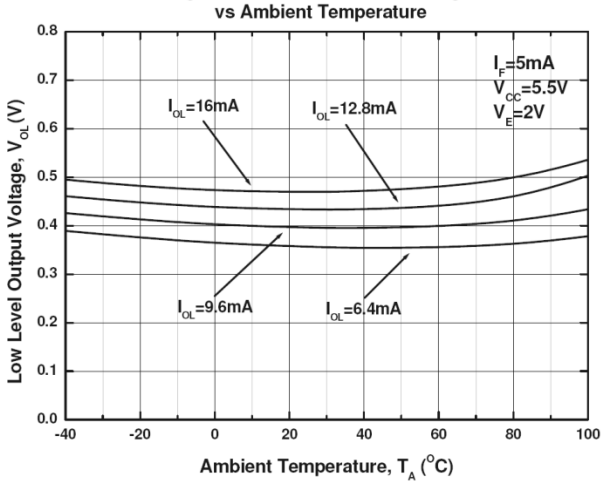

Figure 3. Low Level Output Current vs Ambient Temperature

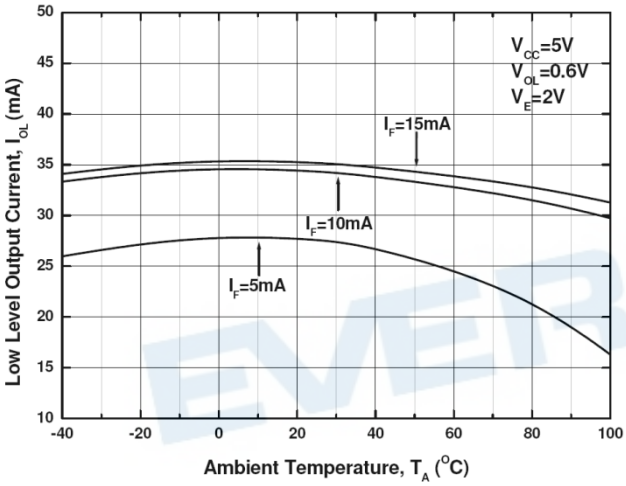

Figure 4. Input Threshold Current vs Ambient Temperature

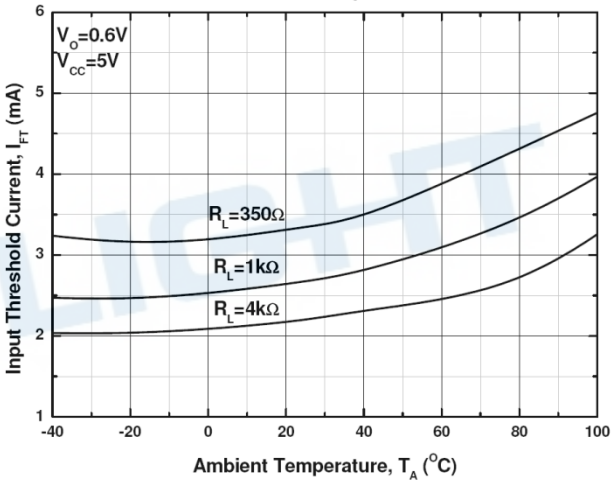

Figure 5. Input Current vs Output Voltage

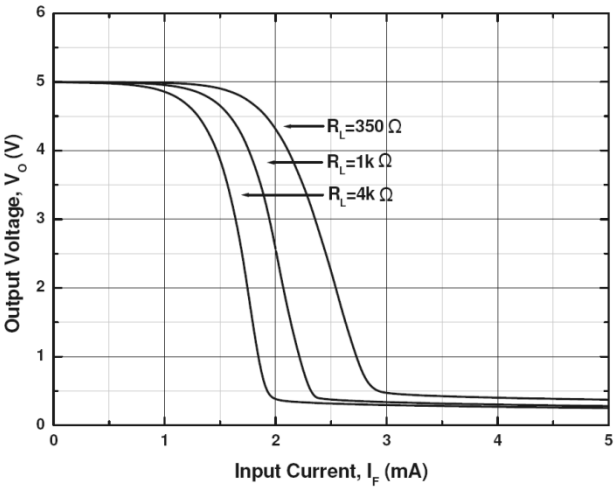

Figure 6. High Level Output Current vs Ambient Temperature

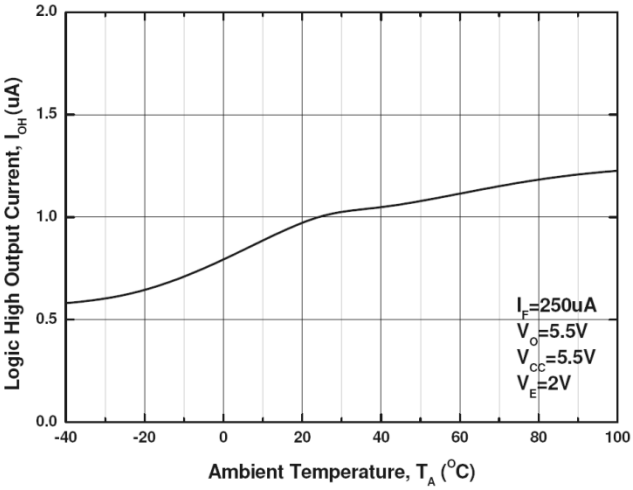

Copyright © 2010, Everlight All Rights Reserved. Release Date : Jan 11, 2017. Issue No: DPC-0000115 Rev.10
Ver:1.0 Release Date:06/15/2016 核准Approved日期(發行)

Figure 7. Propagation Delay vs. Forward Current

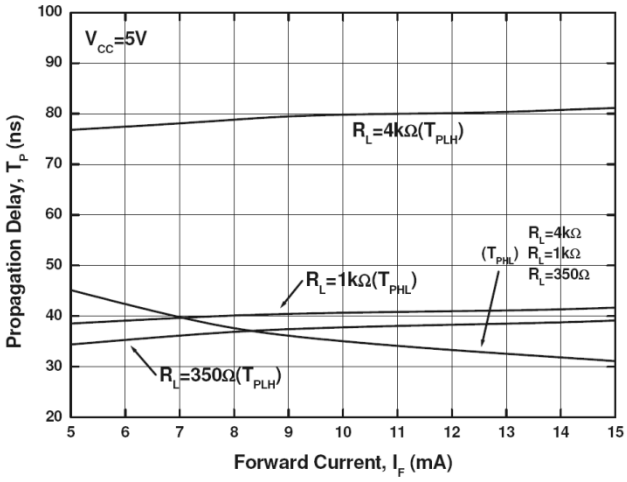

Figure 8. Propagation Delay vs. Temperature

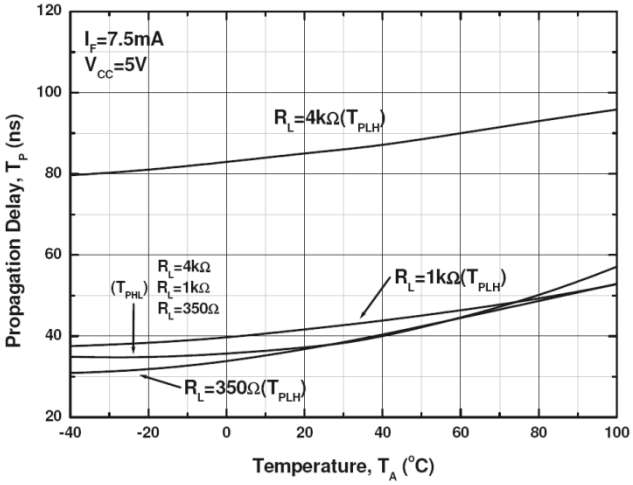

Figure 9. Pulse Width Distortion vs. Temperature

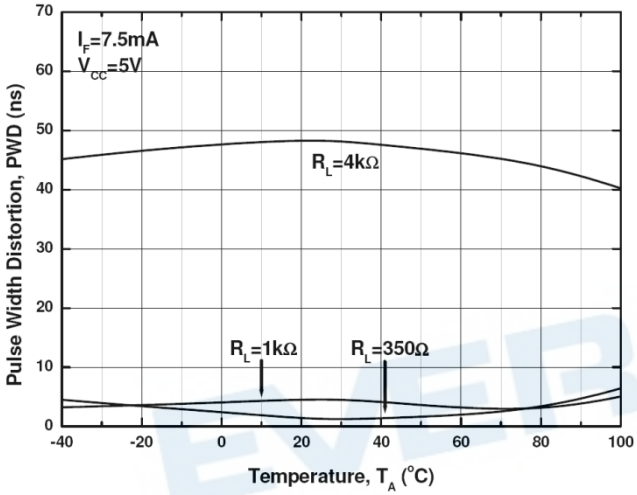

Figure 10. Rise and Fall Time vs. Temperature

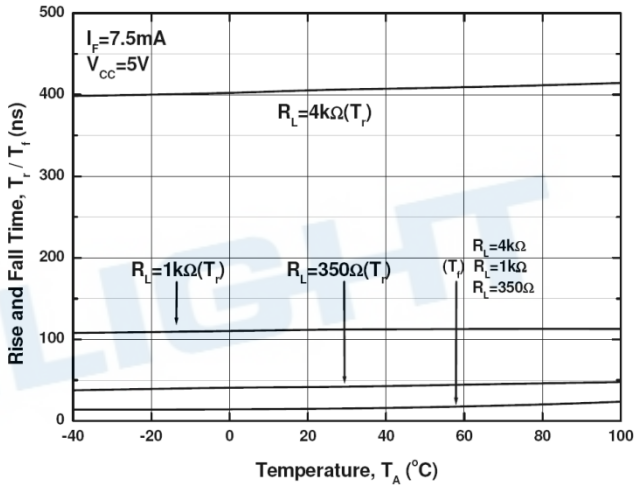

Figure 11. Enable Propagation Delay vs. Temperature

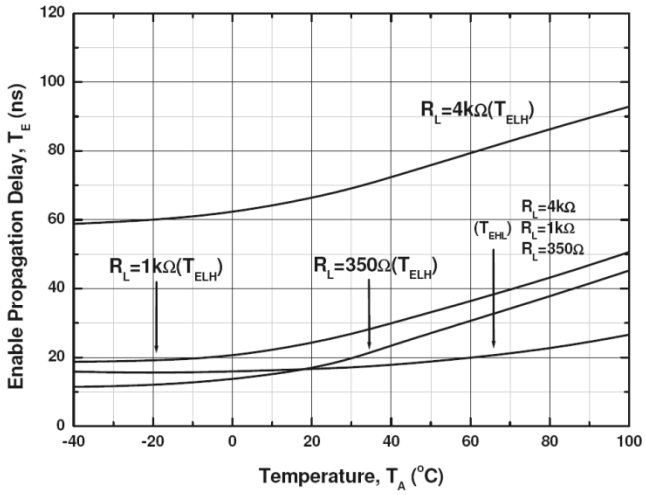

Copyright © 2010, Everlight All Rights Reserved. Release Date : Jan 11, 2017. Issue No: DPC-0000115 Rev.10
Ver:1.0 Release Date:06/15/2016 此版本Approved正式(發行)

Fig. 12 Test Circuit and Waveforms for T_{PHL}, T_{PLH}, tr, and tf

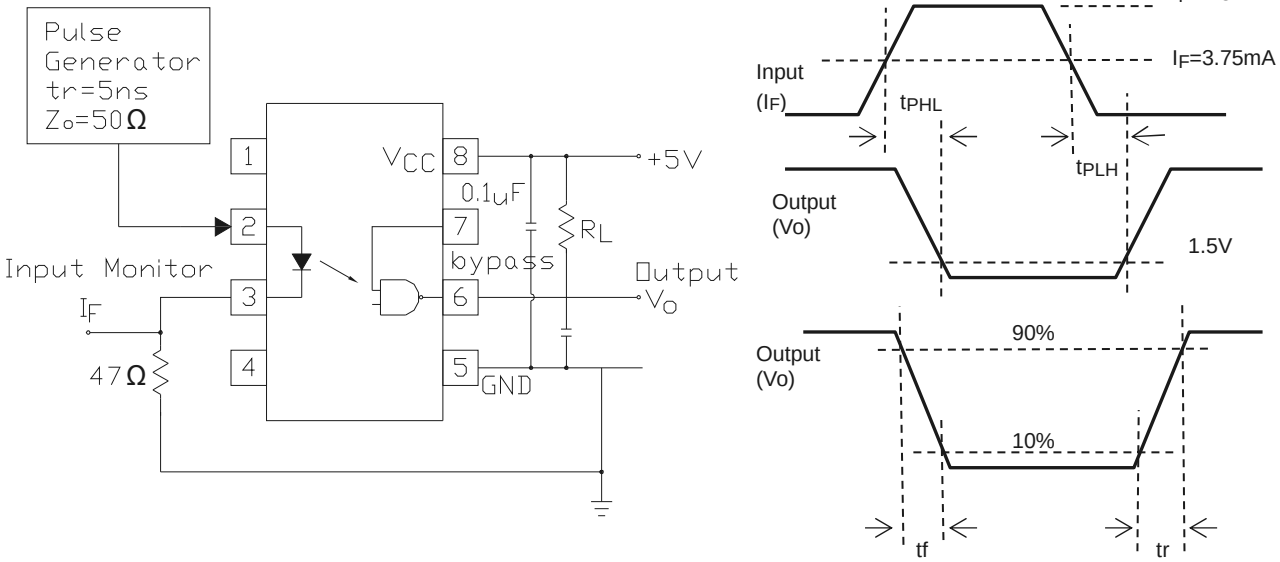

Fig. 13 Test Circuit and Waveform for t_{EHL} and t_{ELH}

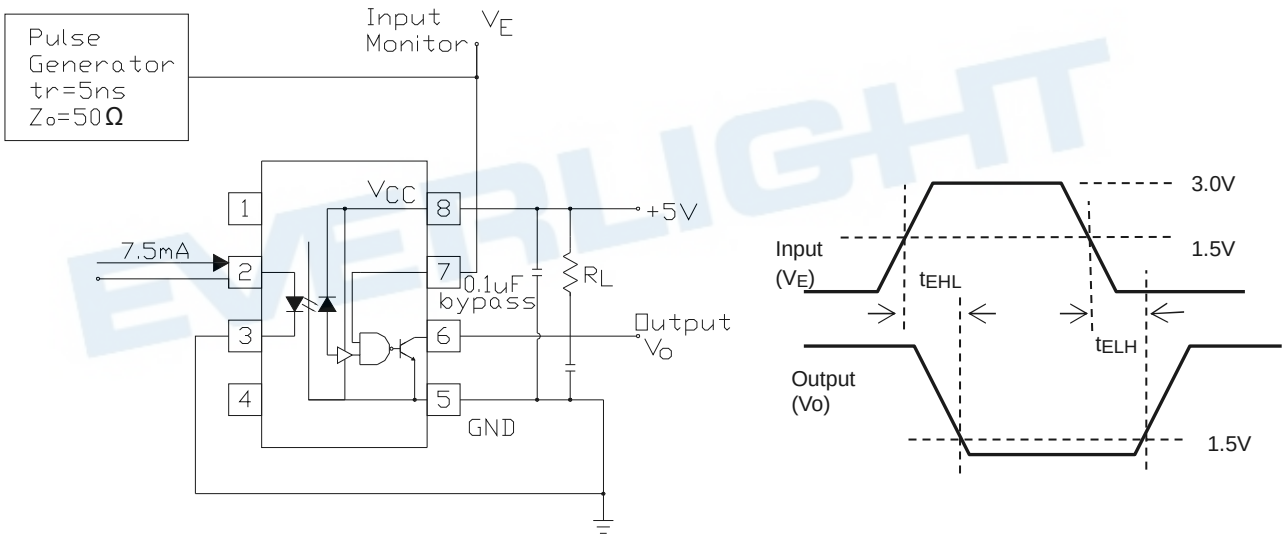

Copyright © 2010, Everlight All Rights Reserved. Release Date : Jan 11, 2017. Issue No: DPC-0000115 Rev.10
Ver:1.0 Release Date:05/15/2018 未受控Approved正式(發行)

Fig. 14 Test Circuit Common Mode Transient Immunity

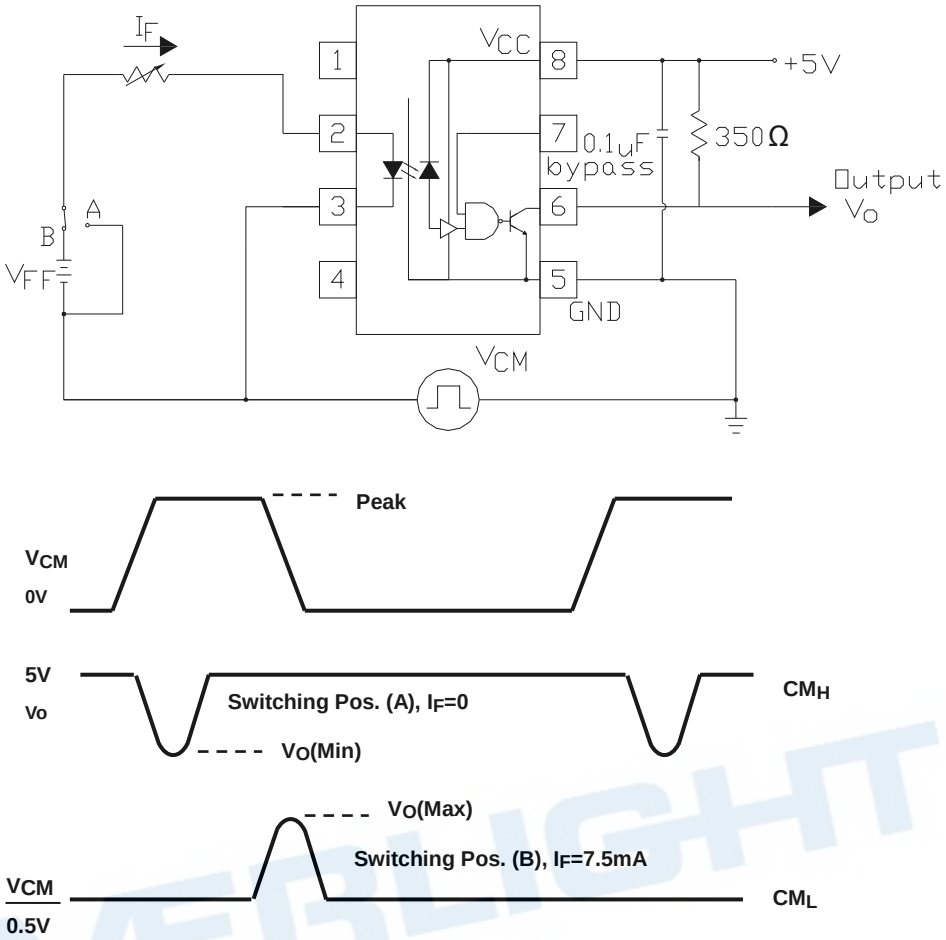

Fig. 15 Recommended Drive Circuit for ELW2611 Families for High-CMR

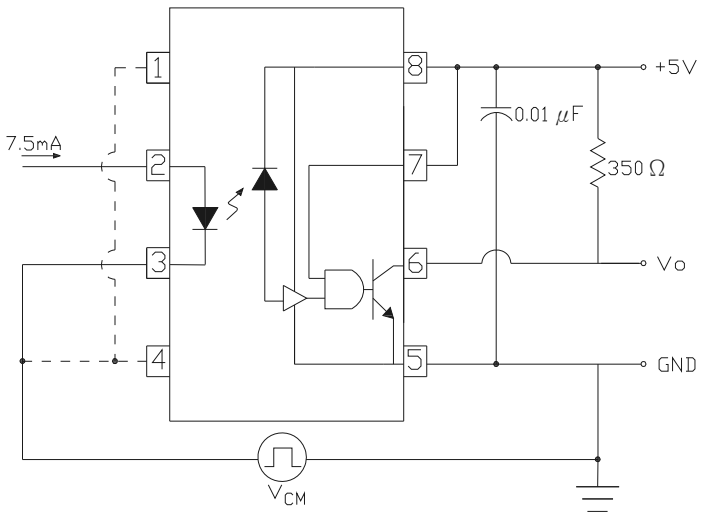

Copyright © 2010, Everlight All Rights Reserved. Release Date : Jan 11, 2017. Issue No: DPC-0000115 Rev.10

Note

*3 The V_{CC} supply must be bypassed by a 0.1μF capacitor or larger. This can be either a ceramic or solid tantalum capacitor with good high frequency characteristic and should be connected as close as possible to the package V_{CC} and GND pins

*4. Enable Input – No pull up resistor required as the device has an internal pull up resistor.

*5. T_{PLH}– Propagation delay is measured from the 3.75mA level on the HIGH to LOW transition of the input current pulse to the 1.5 V level on the LOW to HIGH transition of the output voltage pulse.

*6. T_{PHL}– Propagation delay is measured from the 3.75mA level on the LOW to HIGH transition of the input current pulse to the 1.5 V level on the HIGH to LOW transition of the output voltage pulse.

*7. tr– Rise time is measured from the 90% to the 10% levels on the LOW to HIGH transition of the output pulse.

*8. tf– Fall time is measured from the 10% to the 90% levels on the HIGH to LOW transition of the output pulse.

*9. tELH– Enable input propagation delay is measured from the 1.5V level on the HIGH to LOW transition of the input voltage pulse to the 1.5V level on the LOW to HIGH transition of the output voltage pulse.

*10. tEHL– Enable input propagation delay is measured from the 1.5V level on the LOW to HIGH transition of the input voltage pulse to the 1.5V level on the HIGH to LOW transition of the output voltage pulse.

*11 CMH– The maximum tolerable rate of rise of the common mode voltage to ensure the output will remain in the HIGH state (i.e., V_{OUT} > 2.0V).

*12 CML– The maximum tolerable rate of rise of the common mode voltage to ensure the output will remain in the LOW output state (i.e., V_{OUT} < 0.8V).

Order Information

Part Number

ELW137Y(Z)-V

Or

ELW26XXY(Z)-V

Note

XX = 01 or 11 for ELW26 part no.
Y = Lead form option (S or none)
Z = Tape and reel option (TA, TB or none)
V = VDE (optional)

Option	Description	Packing quantity
None	Standard DIP-8	40 units per tube
S (TA)	Surface mount lead form + TA tape & reel option	500 units per reel
S (TB)	Surface mount lead form + TB tape & reel option	500 units per reel

Copyright © 2010, Everlight All Rights Reserved. Release Date : Jan 11, 2017. Issue No: DPC-0000115 Rev.10
Ver:1.0 Release Date:06/15/2016 審核:Approved:正式(發行)

Package Dimension
(Dimensions in mm)

Standard DIP Type

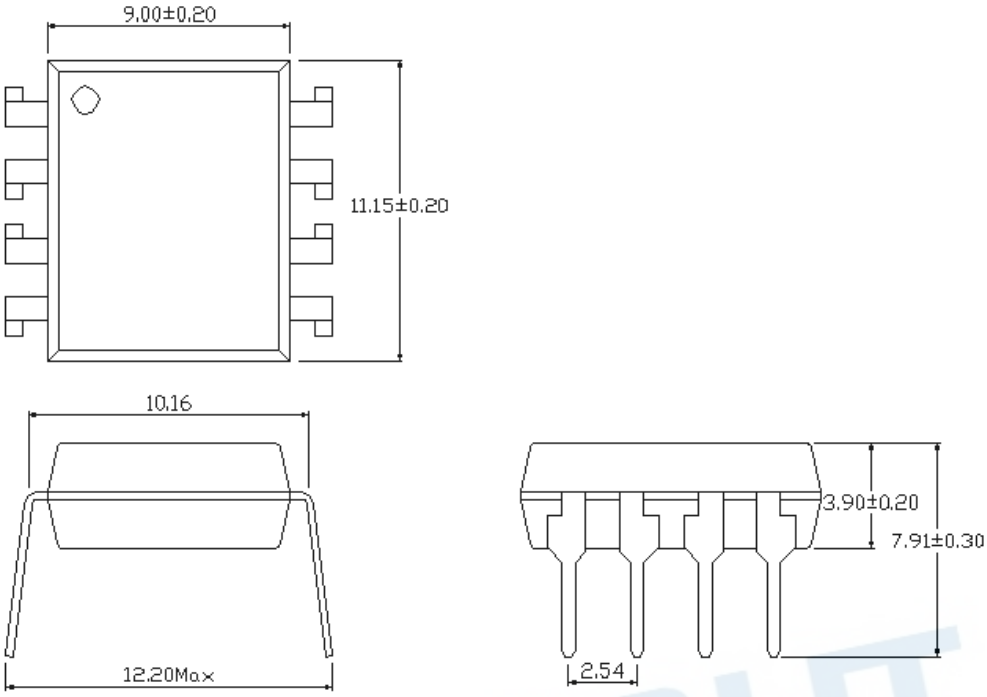

Option S Type

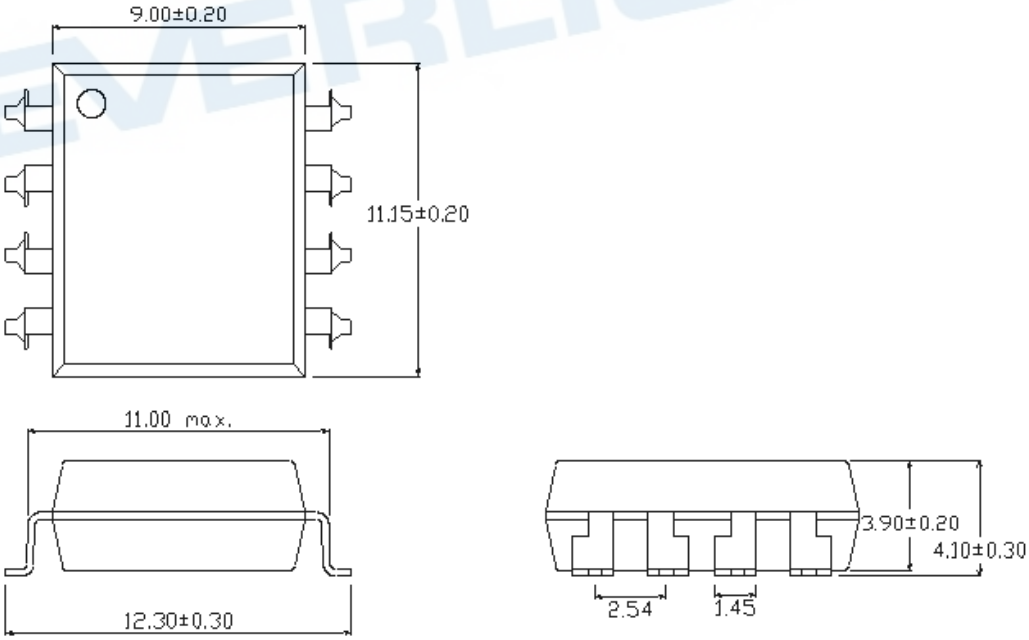

Copyright © 2010, Everlight All Rights Reserved. Release Date : Jan 11, 2017. Issue No: DPC-0000115 Rev.10

Ver:1.0 Release Date:06/15/2016 状态:Approved(正式版本)

Recommended Pad Layout for Surface Mount Leadform

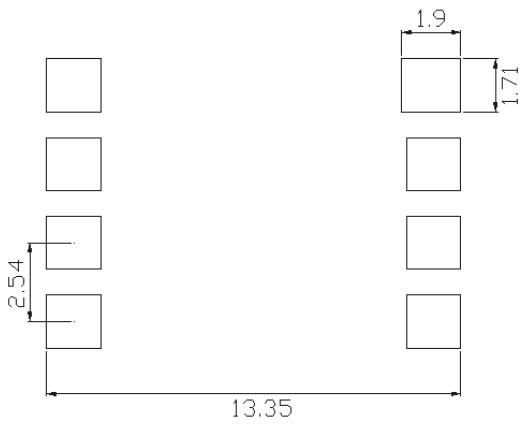

Notes
Suggested pad dimension is just for reference only.
Please modify the pad dimension based on individual need.

Device Marking

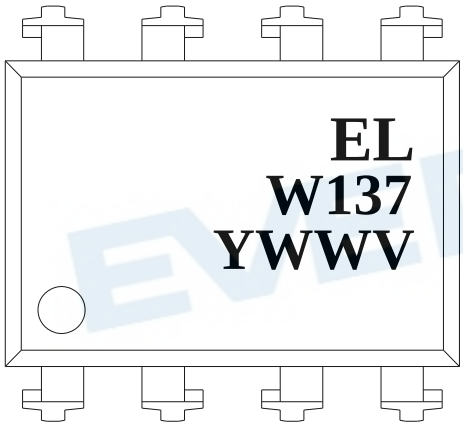

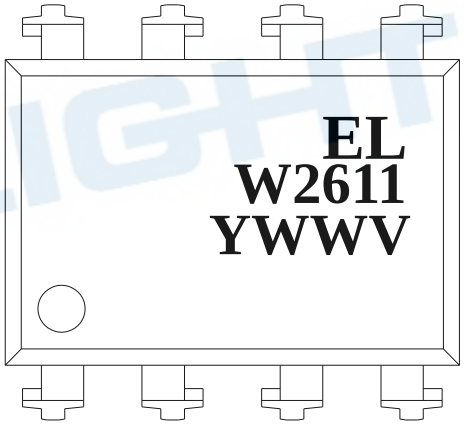

Notes

EL	denotes EVERLIGHT
W137	denotes Device Number
W2611	denotes Device Number
Y	denotes 1 digit Year code
WW	denotes 2 digit Week code
V	denotes VDE (optional)

Copyright © 2010, Everlight All Rights Reserved. Release Date : Jan 11, 2017. Issue No: DPC-0000115 Rev.10
Ver:2.10 Release Date:06/15/2016 此版本Approved正式(發行)

Tape & Reel Packing Specifications

Option TA

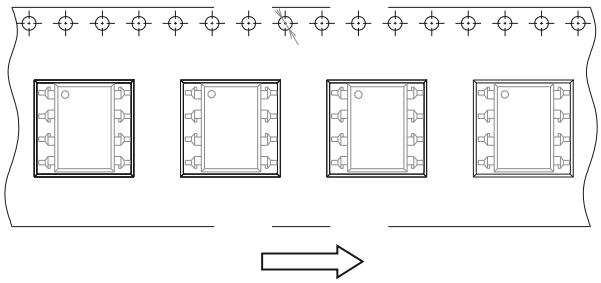

Direction of feed from reel

Option TB

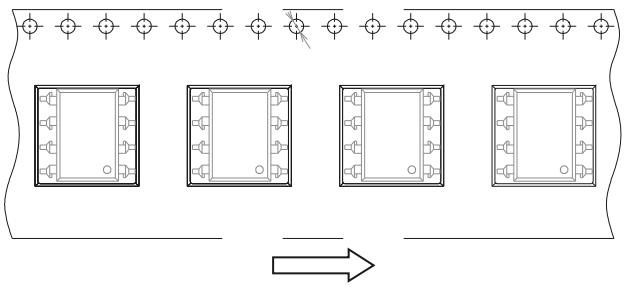

Direction of feed from reel

Tape Dimension

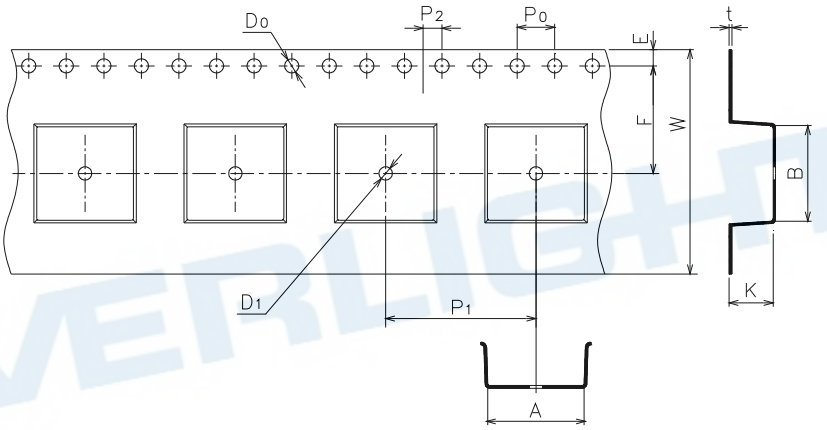

Dimension No.	A	B	Do	D1	E	F
Dimension(mm)	12.7±0.1	11.45±0.1	1.5±0.1	1.5±0.1	1.75±0.1	11.5±0.1
Dimension No.	**Po**	**P1**	**P2**	**t**	**W**	**K**
Dimension(mm)	4.0±0.1	16.0±0.1	2.0±0.1	0.4±0.05	24.00±0.3	4.6±0.1

Copyright © 2010, Everlight All Rights Reserved. Release Date : Jan 11, 2017. Issue No: DPC-0000115 Rev.10
Ver:1.0 Release Date:06/15/2016 此版本Approved正式(發行)

Precautions for Use

1. Soldering Condition

1.1 (A) Maximum Body Case Temperature Profile for evaluation of Reflow Profile

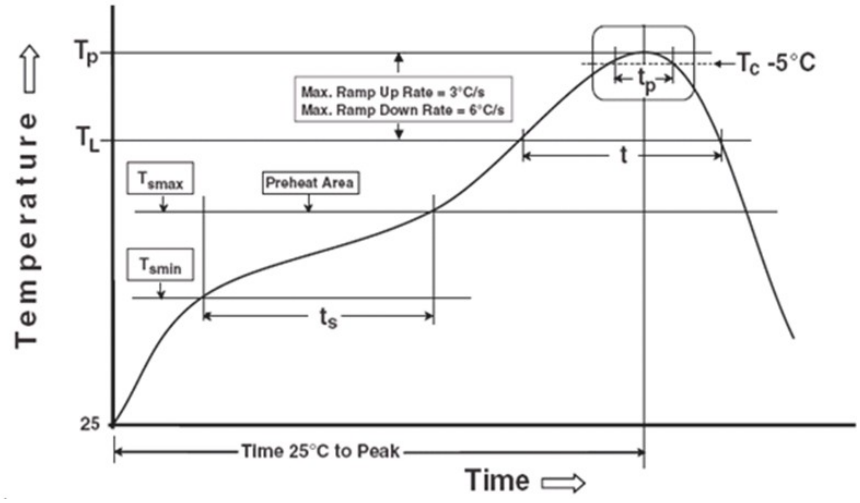

Note:	Reference: IPC/JEDEC J-STD-020D
Preheat	
Temperature min (T_{smin})	150°C
Temperature max (T_{smax})	200°C
Time (T_{smin} to T_{smax}) (t_s)	60-120 seconds
Average ramp-up rate (T_{smax} to T_p)	3°C/second max
Other	
Liquidus Temperature (T_L)	217°C
Time above Liquidus Temperature (t_L)	60-100 sec
Peak Temperature (T_P)	260°C
Time within 5°C of Actual Peak Temperature: T_P - 5°C	30 s
Ramp- Down Rate from Peak Temperature	6°C /second max.
Time 25°C to peak temperature	8 minutes max.
Reflow times	3 times

Copyright © 2010, Everlight All Rights Reserved. Release Date : Jan 11, 2017. Issue No: DPC-0000115 Rev.10

Ver:10 Release Date:06/15/2016 此版本Approved正式(發行)

DISCLAIMER

1. Above specification may be changed without notice. EVERLIGHT will reserve authority on material change for above specification.
2. The graphs shown in this datasheet are representing typical data only and do not show guaranteed values.
3. When using this product, please observe the absolute maximum ratings and the instructions for use outlined in these specification sheets. EVERLIGHT assumes no responsibility for any damage resulting from use of the product which does not comply with the absolute maximum ratings and the instructions included in these specification sheets.
4. These specification sheets include materials protected under copyright of EVERLIGHT. Reproduction in any form is prohibited without the specific consent of EVERLIGHT.
5. This product is not intended to be used for military, aircraft, automotive, medical, life sustaining or life saving applications or any other application which can result in human injury or death. Please contact authorized Everlight sales agent for special application request.
6. Statements regarding the suitability of products for certain types of applications are based on Everlight's knowledge of typical requirements that are often placed on Everlight products in generic applications. Such statements are not binding statements about the suitability of products for a particular application. It is the customer's responsibility to validate that a particular product with the properties described in the product specification is suitable for use in a particular application. Parameters provided in datasheets and/or specifications may vary in different applications and performance may vary over time. All operating parameters, including typical parameters, must be validated for each customer application by the customer's technical experts. Product specifications do not expand or otherwise modify Everlight's terms and conditions of purchase, including but not limited to the warranty expressed therein.

Copyright © 2010, Everlight All Rights Reserved. Release Date : Jan 11, 2017. Issue No: DPC-0000115 Rev.10

Ver:1.0 Release Date:06/15/2016 此版本为approved正式版本